Super Endurance™ Kingpinless-Style Casters

#S-SEC-83SYT Swivel showing Superlast® wheel

The *Super Endurance™ Series* casters represent the "best of breed" in kingpinless-style design for extra heavy-duty applications. The *Super Endurance™* represents a beefed up version of our standard *Endurance™ Series* found on pages 42-43. Like the standard *Endurance™ Series*, the top plate and inner raceway are formed from one piece, providing a superior raceway for shock conditions. Once formed, the raceways are CNC-machined and then hardened to ensure a uniform depth in hardness of the swivel raceway. The hardening and the CNC-machining together produce an excellent swiveling caster under extreme loads.

All *Super Endurance™ Series* casters are finished in gray enamel and come standard with a choice of twelve different wheel types. Bearing selections include double sealed precision ball bearings, precision tapered bearings, or straight roller bearings.

QUALITY FEATURES

Swivel Construction – forged steel top plate and fork base; ⅜" x 3" plate steel legs welded inside and outside to forged steel horn base.

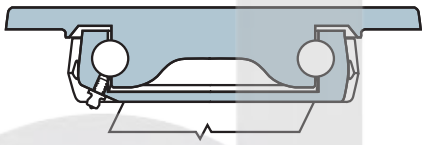

Load Bearing – 3⅝" diameter hardened and CNC-machined raceway with ⅝" balls.

Axle – ¾" diameter hex head with lock nut.

Lubrication Fittings – Ball-check type in swivel assembly and in wheel hubs with tapered or straight roller bearings.

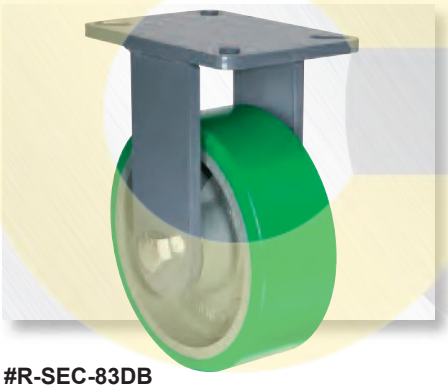

#R-SEC-83DB
Rigid showing *Duralast® Wheel.*

THREE YEAR WARRANTY

The *Super Endurance Series (SEC)* is backed by *Hamilton's Three Year Product Warranty.* Refer to selection table for qualifying wheels.

OPTIONAL ACCESSORIES *more help on page 13*

- **Swivel Lock – Field Installable**
  – convert swivel to rigid for straight line steering

- **Sealed Swivel Assembly (-SS)**
  –prolongs caster life in harsh environments
- **Wheel Bearing Seals (-BS)**
  –prolong wheel life in harsh environments
- **Custom Engineering**
  –Hamilton engineers will custom design any caster to meet customer requirements.

FEATURED WHEEL BEARINGS

Precision Ball Bearings (B): double sealed, maintenance free, superior rollability aids manual applications, not recommended if shock loading is prevalent.

Precision Tapered Roller Bearings (T): best for most severe heavy duty and power-towed applications.

Straight Roller Bearing (H): traditional anti-friction bearing, best for manual applications where shock loading (but no side thrust) is prevalent.

BRAKE CHOICES *for more help, see page 20*

★-FB

Side Foot Brake
[N/A with tapered bearings]

★-FRB

Rap-A-Round Foot Brake
[N/A with tapered bearings]

★-ZB

Heavy Duty Contact Brake
[not ★ with tapered bearings]

CasterDepot

casterdepot.com

Super Endurance™ Kingpinless-Style Casters

WHEEL CHOICES *for more help, see pages 14 & 15*

Duralast®: 95A poly on iron – our standard urethane

Duralast® XC: 70D extra hard poly on iron, higher capacity urethane

Forged Steel: highest capacity, tensile strength 75,000 psi

Metal: cast iron, heavy duty design

Nylast™: high capacity cast nylon, corrosion resistant

Plastex: phenolic, low cost, high capacity

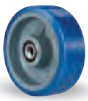
Poly-Soft®: 85A softer poly on iron – quieter, easy rolling, debris resistant urethane

Moldon Rubber: 1" thick 70D rubber, tensile strength exceeds 1,000 psi

Superlast®: 95A 1" thick poly/super duty forged steel center

Superlast® XC: 70D extra hard 1" thick poly/forged steel center – highest capacity urethane

Super Ultralast™: 95A 1" thick ultimate premium urethane on super duty forged steel center

Ultralast™: 95A -the ultimate premium urethane, outperforms all other urethanes

Mounting Plate Dimensions

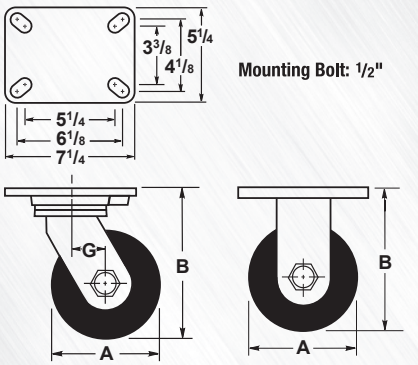

PRONTO® SAME DAY SHIPMENT!

★ = same day/next day ***PRONTO®*** shipment.

SEC Series Selection Table

3YR = 3 Year Warranty applies

Wheel				Swivel Caster			Rigid Caster			Load Cap. Lbs.	Total Ht. B	Swivel Offset G
Dia. A	Face	Type	Replacement Number¤	Hamilton No.† Prec. BB/Roller	Hamilton No. Tapered Brgs.	Wt. Lbs.	Hamilton No.† Prec. BB/Roller	Hamilton No. Tapered Brgs.	Wt. Lbs.			
6	3	Duralast®	W-630-DB-¾	★S-SEC-63DB 3YR	★S-SEC-63DT 3YR	25	★R-SEC-63DB 3YR	★R-SEC-63DT 3YR	21	2200	8	2⅛
		Duralast XC®	W-630-DB70-¾	★S-SEC-63DB70 3YR	S-SEC-63DT70 3YR	25	★R-SEC-63DB70 3YR	R-SEC-63DT70 3YR	21	2860		
		Forged Steel	W-630-FSB-¾	★S-SEC-63FSB 3YR	★S-SEC-63FST 3YR	33	★R-SEC-63FSB 3YR	★R-SEC-63FST 3YR	29	6000		
		Metal	W-630-MB-¾	★S-SEC-63MB	S-SEC-63MT	25	★R-SEC-63MB	R-SEC-63MT	21	2500		
		Nylast™‡	W-630-NYB-¾	★S-SEC-63NYB	X	22	★R-SEC-63NYB	X	15	5400		
		Plastex‡*	W-630-P-1	★S-SEC-63PH	S-SEC-63PT	21	★R-SEC-63PH	R-SEC-63PT	17	2000		
		Poly-Soft®	W-630-SPB-¾	★S-SEC-63SPB 3YR	S-SEC-63SPT 3YR	25	★R-SEC-63SPB 3YR	R-SEC-63SPT 3YR	21	1800		
		M.O. Rubber	W-630-R-1	★S-SEC-63RH	S-SEC-63RT	25	★R-SEC-63RH	R-SEC-63RT	21	680		
		Ultralast™	W-630-TRB-¾	★S-SEC-63TRB 3YR	S-SEC-63TRT 3YR	30	★R-SEC-63TRB 3YR	R-SEC-63TRT 3YR	24	2600		
8	3	Duralast®	W-830-DB-¾	★S-SEC-83DB 3YR	★S-SEC-83DT 3YR	31	★R-SEC-83DB 3YR	★R-SEC-83DT 3YR	27	2500	10½	2¼
		Duralast® XC	W-830-DB70-¾	★S-SEC-83DB70 3YR	S-SEC-83DT70 3YR	36	★R-SEC-83DB70 3YR	R-SEC-83DT70 3YR	30	3250		
		Forged Steel	W-830-FSB-¾	★S-SEC-83FSB 3YR	★S-SEC-83FST 3YR	34	★R-SEC-83FSB 3YR	★R-SEC-83FST 3YR	30	6000		
		Metal	W-830-MB-¾	★S-SEC-83MB	S-SEC-83MT	32	★R-SEC-83MB	R-SEC-83MT	28	2600		
		Nylast™‡	W-830-NYB-¾	★S-SEC-83NYB	X	26	★R-SEC-83NYB	X	19	6000		
		Plastex‡*	W-830-P-1	★S-SEC-83PH	S-SEC-83PT	23	★R-SEC-83PH	R-SEC-83PT	19	3000		
		Poly-Soft®	W-830-SPB-¾	★S-SEC-83SPB 3YR	S-SEC-83SPT 3YR	31	★R-SEC-83SPB 3YR	R-SEC-83SPT 3YR	27	2000		
		M.O. Rubber	W-830-R-1	★S-SEC-83RH	S-SEC-83RT	30	★R-SEC-83RH	R-SEC-83RT	26	840		
		Superlast®	W-830-SYH-1	★S-SEC-83SYH	★S-SEC-83SYT 3YR	40	★R-SEC-83SYH	★R-SEC-83SYT 3YR	36	3500		
		Superlast XC®	W-830-SYB70-¾	S-SEC-83SYB70 3YR	S-SEC-83SYT70 3YR	40	R-SEC-83SYB70 3YR	R-SEC-83SYT70	36	4500		
		Super Ultralast™	W-830-STRB-¾	S-SEC-83STRB 3YR	S-SEC-83STRT 3YR	40	R-SEC-83STRB 3YR	R-SEC-83STRT 3YR	36	4200		
		Ultralast™	W-830-TRB-¾	★S-SEC-83TRB 3YR	S-SEC-83TRT 3YR	31	★R-SEC-83TRB 3YR	R-SEC-83TRT 3YR	27	3000		
10	3	Duralast®	W-1030-DB-¾	★S-SEC-13DB 3YR	★S-SEC-13DT 3YR	35	★R-SEC-13DB 3YR	★R-SEC-13DT 3YR	31	3000	12½	2¾
		Duralast XC®	W-1030-DB70-¾	★S-SEC-13DB70 3YR	S-SEC-13DT70 3YR	35	★R-SEC-13DB70 3YR	R-SEC-13DT70 3YR	31	3900		
		Forged Steel	W-1030-FSB-¾	★S-SEC-13FSB 3YR	★S-SEC-13FST 3YR	42	★R-SEC-13FSB 3YR	★R-SEC-13FST 3YR	38	6000		
		Metal	W-1030-M-1	★S-SEC-13MH	S-SEC-13MT	34	★R-SEC-13MH	R-SEC-13MT	30	2600		
		Plastex‡	W-1030-P-1	★S-SEC-13PH	S-SEC-13PT	30	★R-SEC-13PH	R-SEC-13PT	24	2900		
		Poly-Soft®	W-1030-SPB-¾	★S-SEC-13SPB 3YR	S-SEC-13SPT 3YR	35	★R-SEC-13SPB	R-SEC-13SPT 3YR	31	2400		
		M.O. Rubber	W-1030-R-1	★S-SEC-13RH	S-SEC-13RT	31	★R-SEC-13RH	R-SEC-13RT 3YR	27	1000		
		Ultralast™	W-1030-TRB-¾	S-SEC-13TRB 3YR	S-SEC-13TRT 3YR	42	R-SEC-13TRB 3YR	R-SEC-13TRT 3YR	36	3600		
12	3	Duralast®	W-1230-DB-¾	★S-SEC-12DB 3YR	★S-SEC-12DT 3YR	54	★R-SEC-12DB	★R-SEC-12DT 3YR	50	3500	15½	2⅜
		Duralast XC®	W-1230-DB70-¾	S-SEC-12DB70 3YR	S-SEC-12DT70 3YR	54	R-SEC-12DB70 3YR	R-SEC-12DT70 3YR	50	4550		
		Metal	W-1230-M-1	★S-SEC-12MH	S-SEC-12MT	42	★R-SEC-12MH	R-SEC-12MT	38	2500		
		Plastex‡	W-1230-P-1	★S-SEC-12PH	S-SEC-12PT	29	★R-SEC-12PH	R-SEC-12PT	25	3500		
		Poly-Soft®	W-1230-SPB-¾	★S-SEC-12SPB 3YR	S-SEC-12SPT 3YR	54	★R-SEC-12SPB 3YR	R-SEC-12SPT 3YR	50	2800		
		M.O. Rubber	W-1230-R-1	★S-SEC-12RH	S-SEC-12RT	36	★R-SEC-12RH	R-SEC-12RT	32	1140		
		Ultralast™	W-1230-TRB-¾	S-SEC-12TRB 3YR	S-SEC-12TRT 3YR	57	R-SEC-12TRB 3YR	R-SEC-12TRT 3YR	51	4200		

¤ With straight roller or precision ball bearings. For catalog number of corresponding tapered bearing wheels, consult factory.
† Hamilton No.s ending in "B" = Prec. Ball Bearing, "H" = Straight Roller Bearing, "T" = Prec. Tapered Roller Bearing.
‡ Straight-sided wheel. * This wheel lubricated through lube axle.